AT310K User Manual V1.0

Updated by 2025-12-10

Content

Preface 3
1. Product Introduction 4
2. Technical Specification 4
3. Interface description 5
4. SIM Card Installation 5
5. Operation 6
6. Device installation 6
7. LED indicator 7
8. JT808 protocol commands 8
9. Serial Port configuration 12

Preface

Thank you for choosing the company's AT310K GPS tracking products, please carefully read the instructions before operating.

⚠ Disclaimer：

- Read this user manual carefully please. When you start use this product, then you are deemed to have read this user's manual.
- This Product used as assistant tool for Security only, can't prevent all kinds of deliberately theft or malicious damage vehicles. For the safety of your assets, you still need keep necessary vigilance and security awareness after you installed this product. We do not bear responsibility to any loss except product itself. Thanks!

1. Product Introduction

AT310K is 4G asset tracker, which integrates 4G wireless communication technology and GPS/BDS satellite navigation and positioning technology. The terminal adopts industrial-grade highly integrated fully built-in antenna design, with built-in 3-axis sensor and intelligent power-saving wake-up work.

Wireless asset trackers with solar panels, leveraging the core advantages of solar self - power supply + wireless interconnection, enable efficient asset management in multiple industries.

2. Technical Specification

Mechanical Parameter	Dimension	190mm x 76mm x 35mm
	Weight	377g
Electrical characteristics	Working Voltage	DC 3.4-4.5V
	Working current	Around 30mA@4V
	Charging voltage	5V/1A
	Sleep current	Around 10mA@4V
	Battery size	10000mA
4G Module		**4G CAT1 EG912U-GL** LTE-FDD: B1/2/3/4/5/7/8/12/13/17/18/19/ 20/25/26/28/66; LTE-TDD: B34/38/39/40/41; GSM: B2/3/5/8
GPS module		(Zhongke Microelectronics) ATGM332D Acquisition sensitivity: -148dBm Tracking sensitivity: -162dBm GPS frequency: L1, 1575.42MHz Locate Sensitivity: <5m,CEP Hot start(average): <1s Cold start(average): <30s
Mode of data transmission		TCP/SMS
Communicate Protocol		JT808
Indication light		GPRS/GPS/Charging
MIC		Build-in(Optional)
Water proof		IP65
Detach sensor		support
Magnet		4 ring magnets

Environment Parameter	Operating Temperature	-20℃ ~ +70℃
	Humidity	10%～85%（No Frosting）

3. Interface description

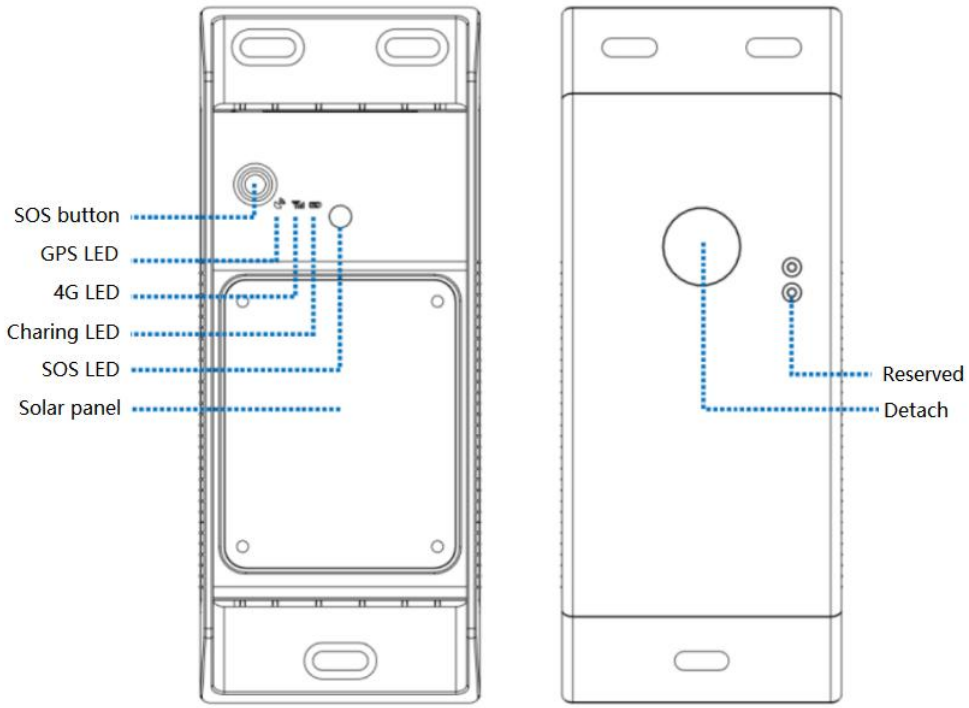

4. SIM Card Installation

This device need install a SIM Card, which must have GPRS data transmission and SMS function. In default setting, this device will use around 10MB~20MB data flow, please select suitable package.

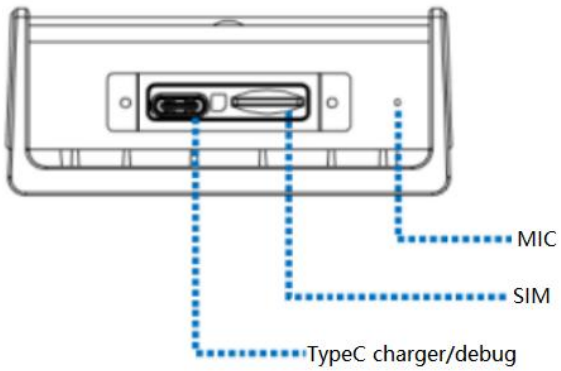

Note:

- Do not install SIM Card in opposite way.
- SIM Card must open GPRS data transmission function
- Confirm the SIM Card have enough balance inside.
- Test SIM card by cellphone to check if it can connect network

5. Operation

1) SOS button:

① when long press 3s and above will trigger SOS alert, also buzzer alarm sound and SOS LED flashing light;

② Double-clicking the SOS button cancels the SOS alarm while also disabling the buzzer and flashing light.

2) MIC:

Authorized/SOS number can call the device and listening.

6. Device installation

① Magnetic installation

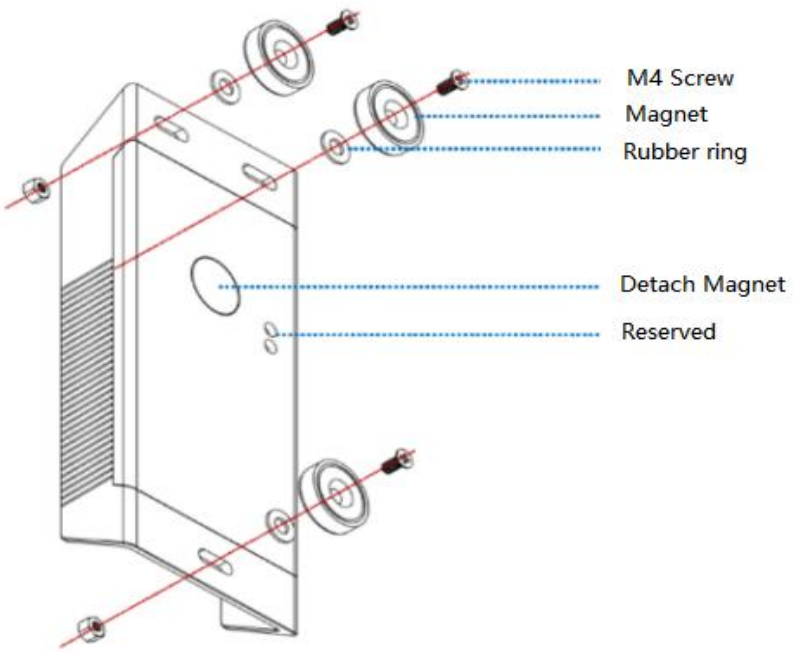

② Detach magnet installation:

- First, put the magnet in side of the casing hole;
- Remove the protective film from the red bracket, stick it onto the magnet, select the installation position and fix it.

If the device removed from installation position, magnet will be detach from the casing and alarm triggers.

7. LED indicator

	LED Color	Status	Status describe
GSM status	Yellow	LED ON	GSM communicate normal,Online
		Blinking	GSM initializing
		LED OFF	In sleep/Power off
GPS status	Blue	LED ON	GPS Located
		Blinking	Finding GPS signal
		LED OFF	In sleep/Power off
Power	Red	LED ON	Charging
		LED OFF	Not charging/fully charged/power off

8. JT808 protocol commands

SMS		
Set authorized phone No.	ADMIN,123456,8613912345678	*Require country code* *Once set center number then only center/authorized number can send SMS.*
	101#136********#	
Set SOS1	102#136********#	*SET SOS1 OK*
Set SOS2	103#136********#	*SET SOS2OK*
Delete authorized phone No.	D101#	
Delete SOS1	D102#	
Delete SOS2	D103#	
Query authorized phone No.	C10#	*ADMIN:+86136*****,SOS1:+86136****,SOS2:+86136*******
Set IP port	IP 121.201.110.106 8800	
Set URL	IP tracking.atelematics.net 8800	
Google link	G1234	
Set APN	APN,123456,cmnet	
	APNUSER,123456,user	
	APNPASSWD,123456,password	
Query IMEI	RIMEI#	
Wake up reporting interval	FREQ,123456,x	X=interval, unit seconds.
In sleep report interval	STATIC,123456,x	X=interval, unit seconds. X=0 means not report any position data during sleep.
Heartbeat interval	INTERVAL,123456,x	X=interval, unit seconds. Default 5mins.
Deep sleep wake up by vibration times	VIBAGILE,123456,x	X=vibrate times detected to wake up device, default is 7 times.
Normal working mode	NMODN,123456,30,60#	Normal Working Mode •30: Indicates the movement interval; report location data

		once every 30 seconds when moving. •60: Indicates the sleep interval; report location data once every 60 seconds when in sleep mode. If the sleep interval is set to 0, no data is transmitted during sleep. Working Logic Detect sleep conditions at intervals according to the sleep command (sleep,123456,0) to enter sleep mode. Working Status •Network: Always on. •GPS: Always on when the interval is ≤ 3 minutes; turned on as needed when the interval is > 3 minutes. Perform one positioning before entering sleep mode. •Report location data at intervals and maintain heartbeat. Sleep Status •GPS: Off. •Network: Always on. •Report location data at intervals and maintain heartbeat. •Indicator light: Off. Wake up by pressing the SOS button or via vibration.
Sleep mode	SMODN,123456,60,1800#	60: Indicates the movement interval; report location data once every 60 seconds when moving. •1800: Indicates the sleep interval; report location data once every 1800 seconds (30 minutes) when in sleep mode. If the sleep interval is set to 0, no location data is transmitted during sleep. Can be woken up by vibration or SOS.

		Working Logic Detect sleep conditions at intervals according to the sleep command (sleep,123456,0) to enter sleep mode.Working Status •Network: Always on. •GPS: Always on when the interval is ≤ 3 minutes; turned on as needed when the interval is > 3 minutes. Perform one positioning before entering sleep mode. •Report location data at intervals and maintain heartbeat. Sleep Status •GPS: Off. •Network: Turned on at intervals and closed after uploading data. •Disconnect from the platform; do not receive SMS or process calls. •Indicator light: Off. Wake up by SOS & vibration.
Motion working Mode	TMODN,123456,600,7200#	600: Indicates the movement interval; report location data once every 600 seconds (10 minutes) when moving. •7200: Indicates the sleep interval; report location data once every 7200 seconds (2 hours) when in sleep mode. The interval cannot be zero. Timed wake-up (if remaining stationary, wake up at intervals according to the sleep interval; if vibration is detected during this period, wake up at intervals according to the movement interval). Working Logic Report a location packet at the set interval, then enter sleep mode. If GPS positioning exceeds 10 seconds or satellite search

		exceeds 180 seconds, turn off GPS and network, report location data, and enter sleep mode.Working Status •Upload at intervals; close network and positioning after uploading data. •Disconnect from the platform; do not receive SMS or process calls. •Indicator light: Off. Can be powered on by pressing keys. Wake up by light sensing & timed wake-up. Sleep Status •GPS: Off. •Network: Turned on at intervals and closed after uploading data. •Disconnect from the platform; do not receive SMS or process calls. •Indicator light: Off. Wake up by SOS & timed wake-up.
Angle report	DIRREP,123456,x	X=degree, default=0
Set/change ID	#99#id#20180001091##	
Factory reset	FORMAT	
Enter Sleep duration	sleep,123456,x	X=duration time to enter sleep, unit minutes, 0=close sleep.
Set timezone	zone,123456,e08	e08=GMT+8
Low power alarm	lowALM,123456,x	*X=low battery percent, default is 20%. if alarm triggered, after get charging and larger than 25% will clear alarm state.*
Query power alarm	lowALM	
Query parameters	CXZT	*ver:AT08F_V2.0_20220512 id:357492069386421 ip:121.201.110.106 6006 apn:internet--,acc:0,sf:1,gsm:6-12,gps:0-0,time:30-60-180,spd:0,zone:+8*
Serial command		

Exit from test mode	AT%TEST=STOP#	
Enable log	AT%TEST=*1234,280*3#	
Query IP, apn	AT%TEST=SMS[][CXZT]	
Set IP PORT	AT%TEST=SMS[][IP 121.201.110.106 8800]	
Change ID	AT%TEST=ID*53214700201#	
RESTART	AT%TEST=RESTART#	
Factory reset	AT%TEST=FORMAT#	
Send with SMS format	AT%TEST=SMS[][SMS cmd] For example: AT%TEST=SMS[][CXZT]	

9.Serial Port configuration

Default Baud rate:115200;
USB driver: CH340 USB-SER
Tool: SSCOM;
Via: USB port.
SERIAL CABLE: Type-C interface
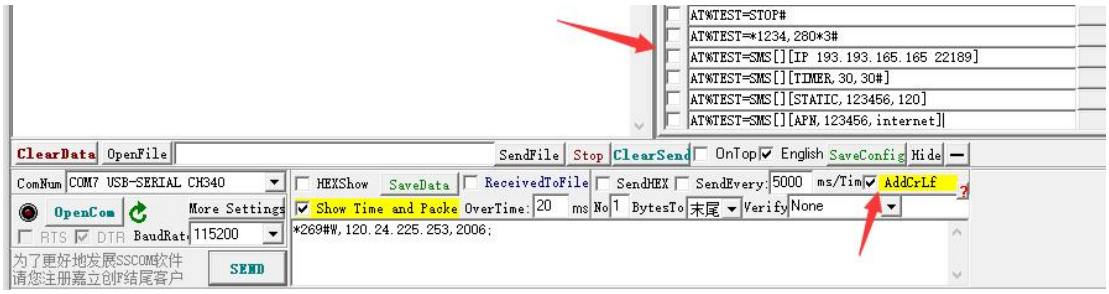
Command format: